# 10-195

## Heavy-Duty 6" Convertible Scraper

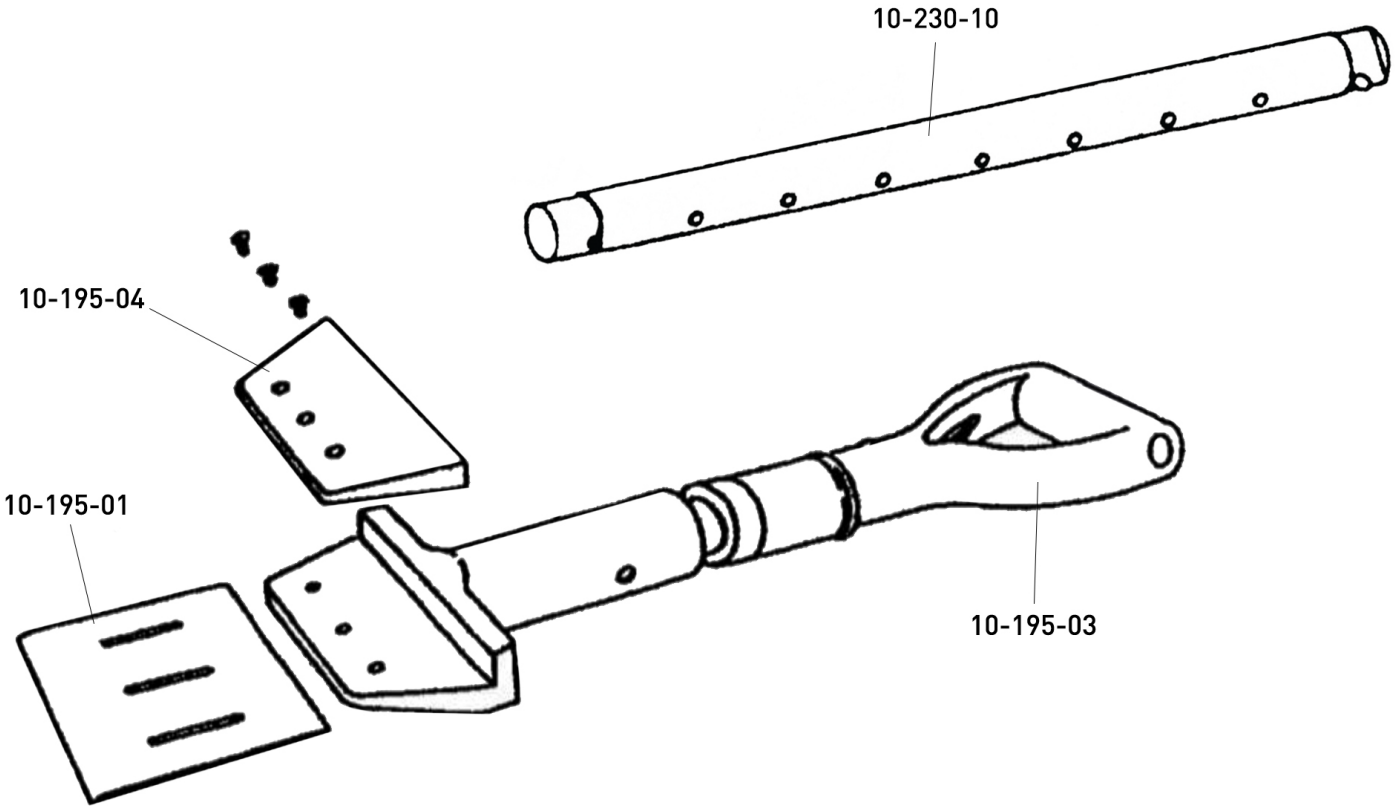


## REPLACEMENT PARTS LIST

| Part # | Description |
|---|---|
| 10-195-01 | Scraper Blade (without screws) |
| 10-195-03 | Complete Handle Assembly |
| 10-195-04 | Retainer Plate with screws |
| 10-230-10 | 36" Steel Carpet Stretcher Extension Tube (sold separately) |